Y Bearing Block (Rear)

Material: MDF
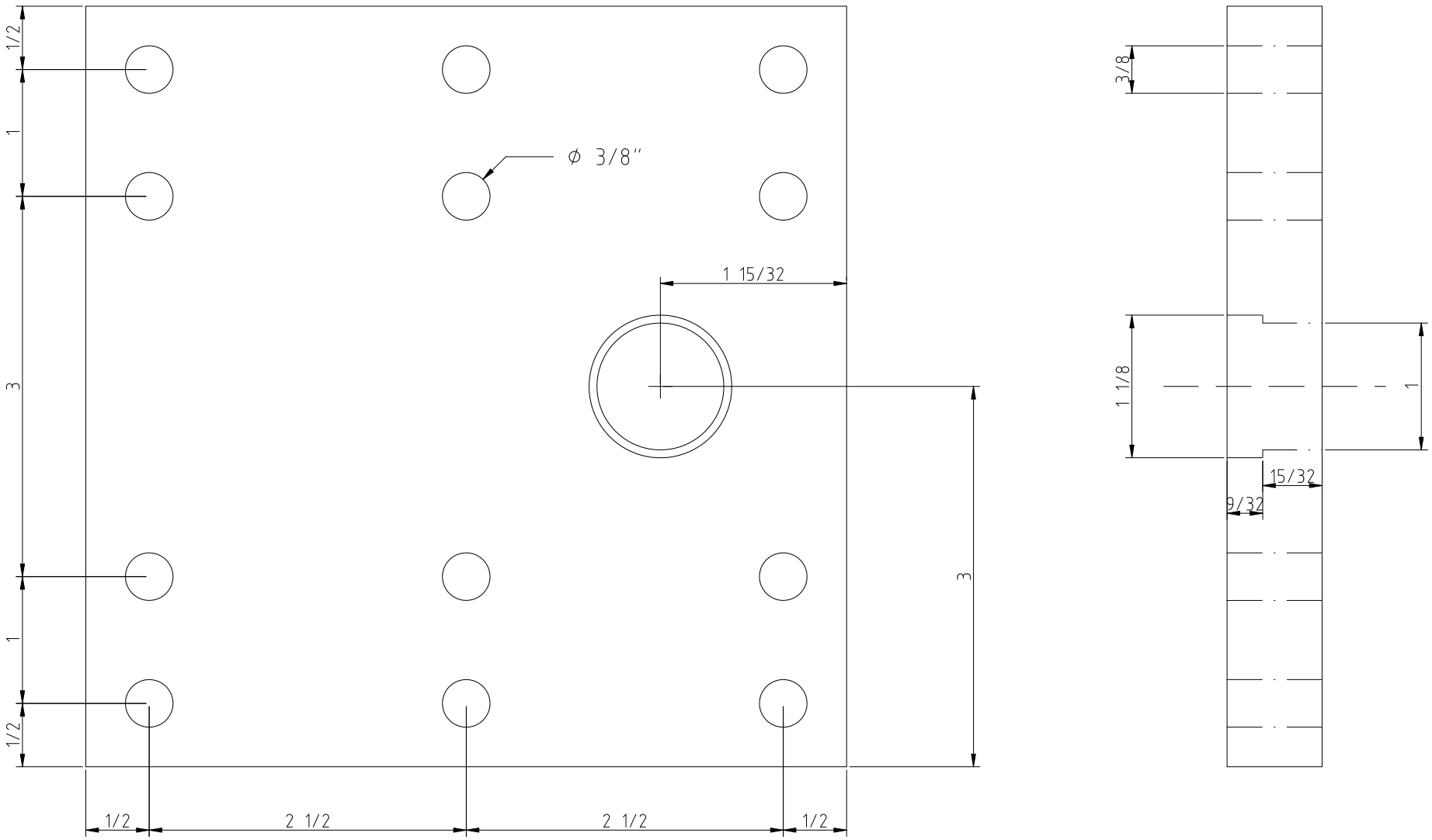
Size: 6" x 6" x 3/4"