Y Bearing Block (Front)

Material: MDF
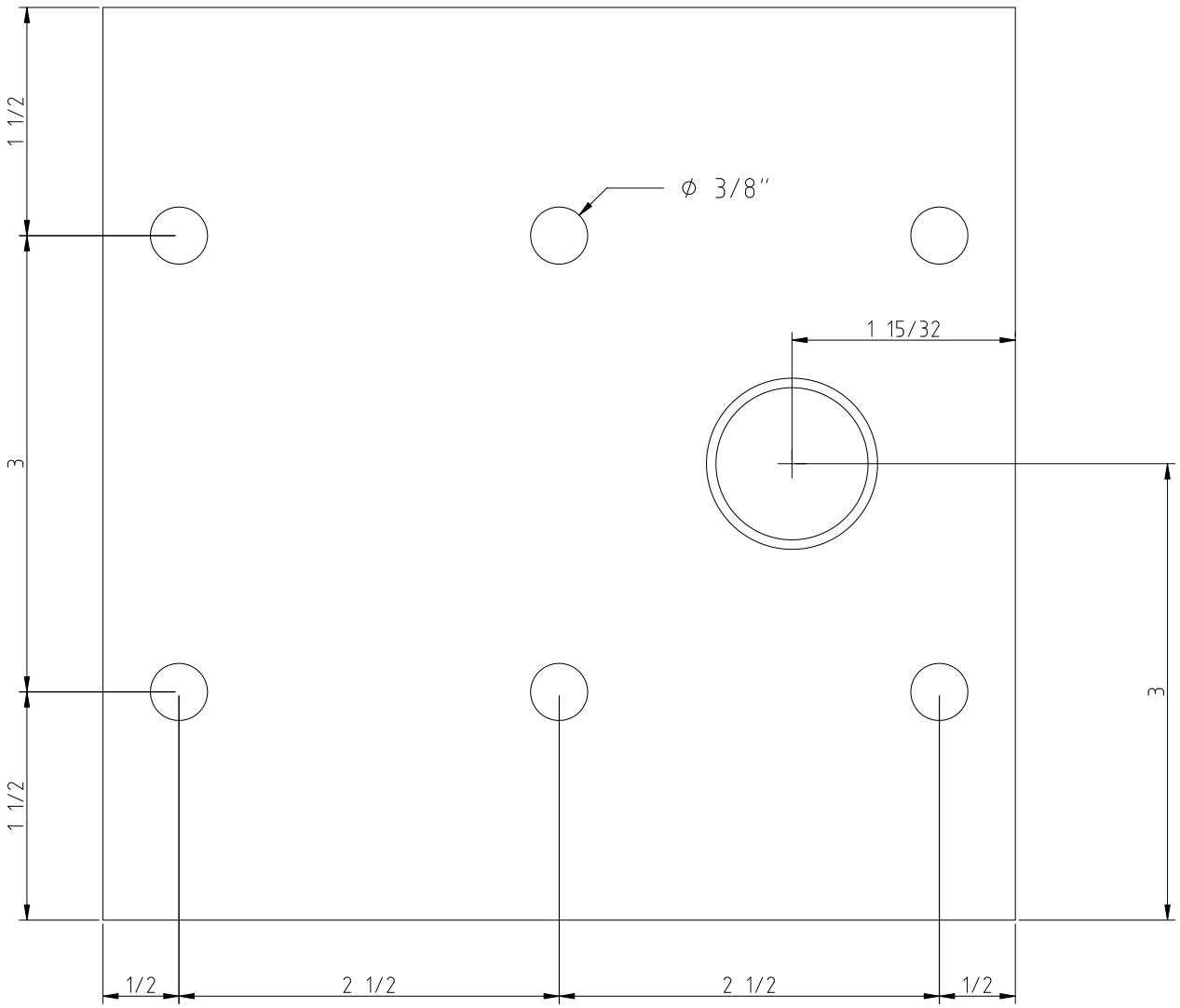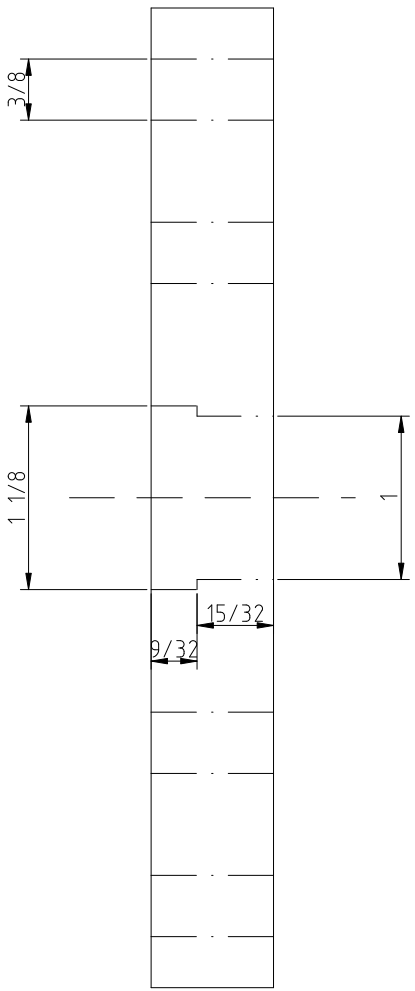
Size: 6" x 6" x 3/4"